Michael Riedel

Transformatorenbau GmbH

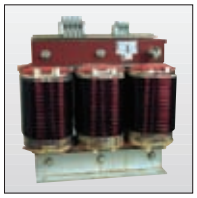

Riedel Catalogue

Product group A & B

Over 25 years practice in quality products

2003

	Introduction	Customer information In general Regulations and directives Technical explanations Terms of sale and delivery
Product group A	Single-phase transformers	Control transformers / stock range Isolation transformers Safety transformers Miniaturized transformers Universal control transformers Anti-interference transformers with special screening High-power transformers Speed regulators Portable transformers
Product group B	Three-phase transformers	Speed regulators in V-circuit Mains transformers Isolating transformers Safety transformers Dry-type transformers
Product group C	Single-phase D.C. power supplies	Single-phase (rectifier) transformers Single-phase compact rectifier transformers Single-phase compact power packs, non-stabilized and stabilized Single-phase switch power packs stabilized, primary- and secondary switched
	Single-phase battery chargers	Single-phase battery chargers
	UPS	D.C.-UPS-modules
	Others	Power packs with back-up battery Voltage control modules
Product group D	Three-phase D.C. power supplies	Three-phase compact rectifier transformers Three-phase universal compact rectifier transformers Three-phase compact rectifier transformers, covered Three-phase compact rectifier transformers, in housing Three-phase switch power packs stabilized, primary- and secondary switched
	Three-phase battery chargers	Three-phase battery chargers
	UPS	D.C.-UPS-modules
Product group E	Variable ratio ring transformers	Single-phase variable ratio ring transformers Three-phase variable ratio ring transformers Motor drives Accessories Voltage stabilizers electro-motorial
Product group F	Chokes	Single-phase line chokes Single-phase twin-line chokes Three-phase filter circuit chokes Three-phase line chokes
Product group G	Other products	Transformers for medical rooms Housings Inrush current limiters

Copyright: BASF/Riedel

Product group

A

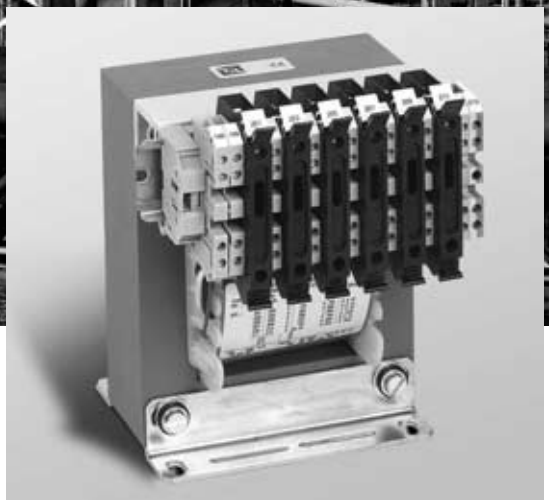

Complex plants in security risk industries require power supplies that meet strict safety demands. Designingelectric and electronic systems calls for special know-how and uncompromising quality assurance. We have the know-how in quality, a goog reason to use Riedel products.

Series RSTN

. . . makes for tension in purchase and engineering

In general

RSTN-transformers can be applied worldwide, meet national and international regulations and are ready for those upcoming. Following designs are available:

Control transformers comp. to **VDE 0570 part 2-2, EN 61558-2-2**
Isolation transformers comp. to **VDE 0570 part 2-4, EN 61558-2-4,** (for sec. 230V only)
Safety transformers comp. to **VDE 0570 part 2-6, EN 61558-2-6,** (for sec. 24V only)

Series RSTN is also available in **-version (approval no. E164203 M / for USA and Canada)** at a surcharge.

Particular advantages of series RSTN:

- best cost-price (large scale manufacture, extremely favorable price-performance relation)
- high reliability and long service life
- compact construction and low weight
- low total losses, thus high efficiency
  (for example reduction of core losses by two-way layering)
- higher than average output at short-time duty
- high performance in comparison to size
- control transformers feature higher value insulation system than regulation dictates
- high voltage stability because of small voltage drop between no-load and load
- voltage adaptation via +-5% tabs
- from 130 VA upwards protected against short cut via insulating bushing
- temperature reserves, even at ta 60°C/B full current load possible
- mounting brackets comp. to DIN 41 307
- stock items (except for 500V-type)

Fusing recommendation:

Below stated fusing recommendations refer to transformer's secondary side and safety fuse cartridges comp. to IEC 127 / EN 60127 (A time-lag), or comp. to IEC 60269 (AgL). Concerning this and also for primary fusing please observe paragraph 'Fusing', catalogue section 'In General'.

Rated current input

Model	I1 max. in A	I1 max. in A	I1 max. in A
pri. voltage ±5%	230V	400V	500V
RSTN 50	0,27	0,16	0,13
RSTN 75	0,40	0,23	0,19
RSTN 100	0,52	0,30	0,24
RSTN 130	0,65	0,38	0,30
RSTN 200	1,00	0,57	0,46
RSTN 250	1,23	0,71	0,57
RSTN 320	1,57	0,90	0,73
RSTN 400	1,94	1,12	0,90
RSTN 500	2,42	1,40	1,12
RSTN 630	3,05	1,76	1,41
RSTN 800	3,83	2,22	1,77
RSTN 1000	4,78	2,77	2,21
RSTN 1100	5,20	3,01	2,41
RSTN 1300	6,15	3,56	2,85
RSTN 1600	7,58	4,38	3,51
RSTN 2000	9,47	5,48	4,38
RSTN 2500	11,87	6,87	5,50
RSTN 3000	14,05	8,13	6,51

Current secondary and fusing recommendation

Model	I2 in A	Fusing A	I2 in A	Fusing A
sec. voltage	230V		24V	
RSTN 50	0,21	0,16 At	2,08	1,60 At
RSTN 75	0,32	0,25 At	3,125	2,50 At
RSTN 100	0,43	0,315 At	4,16	3,15 At
RSTN 130	0,56	0,40 At	5,41	4,00 At
RSTN 200	0,86	0,63 At	8,33	6,30 At
RSTN 250	1,08	0,80 At	10,41	8,00 At
RSTN 320	1,39	1,00 At	13,33	10,0 AgL
RSTN 400	1,73	1,25 At	16,66	16,0 AgL
RSTN 500	2,17	1,60 At	20,83	16,0 AgL
RSTN 630	2,73	2,00 At	26,25	20,0 AgL
RSTN 800	3,47	2,50 At	33,33	35,0 AgL
RSTN 1000	4,34	3,15 At	-	-
RSTN 1100	4,78	4,00 At	-	-
RSTN 1300	5,65	4,00 At	-	-
RSTN 1600	6,95	5,00 At	-	-
RSTN 2000	8,69	6,30 At	-	-
RSTN 2500	10,86	8,00 At	-	-
RSTN 3000	13,04	10,0 AgL	-	-

Available accessories: fully integrated ground screw terminal

Single-phase control transformers comp. to VDE 0570 part 2-2, EN 61558-2-2
Single-phase isolation transformers comp. to VDE 0570 part 2-4, EN 61558-2-4
Single-phase safety transformers comp. to VDE 0570 part 2-6, EN 61558-2-6

RSTN 50 – 3000

Design: Open frame, stationary, for installation and set-up in dry rooms, separate windings, sturdy mounting brackets. Connection to non-tracking transformer terminals with screw connection. The terminals are protected against finger touch or contact with the back of the hand in compliance with accident prevention regulations (VBG 4). Ground connection via tab blade connection 6.3 x 0.8 mm. Accessory ground screw connection terminal available.

IP 00, suitable for installation up to protection rating IP 23 with natural cooling, insulation class E, max. ambient temperature 40°C.

Available in stated voltages only, for other voltages please see identical design type REIA.

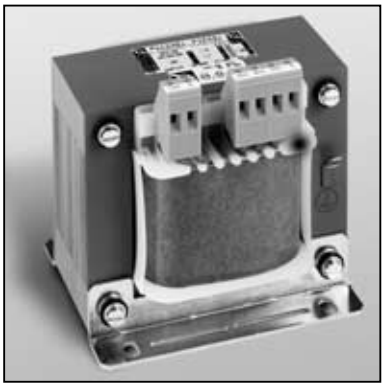

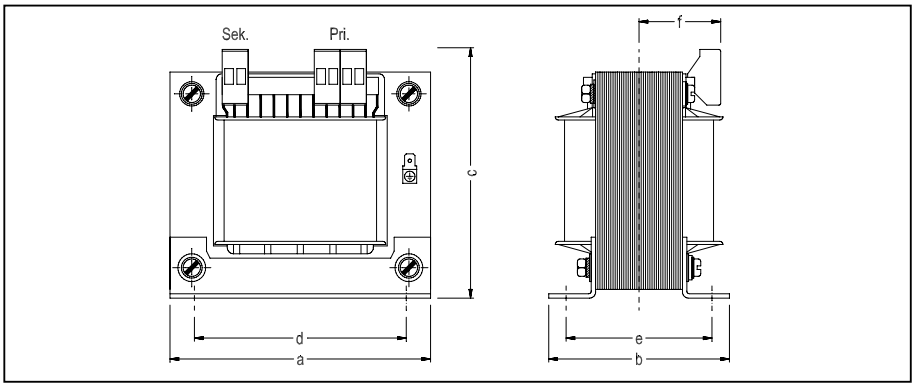

Model	Power VA	475/500/525 V 230 V Article no.	380/400/420 V 230 V Article no.	220/230/240 V 230 V Article no.	475/500/525 V 24 V Article no.	380/400/420 V 24 V Article no.	220/230/240 V 24 V Article no.
RSTN 50	50	1N–500–230–01	1N–400–230–01	1N–230–230–01	1N–500–024–01	1N–400–024–01	1N–230–024–01
RSTN 75	75	1N–500–230–02	1N–400–230–02	1N–230–230–02	1N–500–024–02	1N–400–024–02	1N–230–024–02
RSTN 100	100	1N–500–230–03	1N–400–230–03	1N–230–230–03	1N–500–024–03	1N–400–024–03	1N–230–024–03
RSTN 130	130	1N–500–230–04	1N–400–230–04	1N–230–230–04	1N–500–024–04	1N–400–024–04	1N–230–024–04
RSTN 200	200	1N–500–230–05	1N–400–230–05	1N–230–230–05	1N–500–024–05	1N–400–024–05	1N–230–024–05
RSTN 250	250	1N–500–230–06	1N–400–230–06	1N–230–230–06	1N–500–024–06	1N–400–024–06	1N–230–024–06
RSTN 320	320	1N–500–230–07	1N–400–230–07	1N–230–230–07	1N–500–024–07	1N–400–024–07	1N–230–024–07
RSTN 400	400	1N–500–230–08	1N–400–230–08	1N–230–230–08	1N–500–024–08	1N–400–024–08	1N–230–024–08
RSTN 500	500	1N–500–230–09	1N–400–230–09	1N–230–230–09	1N–500–024–09	1N–400–024–09	1N–230–024–09
RSTN 630	630	1N–500–230–10	1N–400–230–10	1N–230–230–10	1N–500–024–10	1N–400–024–10	1N–230–024–10
RSTN 800	800	1N–500–230–11	1N–400–230–11	1N–230–230–11	1N–500–024–11	1N–400–024–11	1N–230–024–11
RSTN 1000	1000	1N–500–230–12	1N–400–230–12	1N–230–230–12	–	–	–
RSTN 1100	1100	1N–500–230–13	1N–400–230–13	1N–230–230–13	–	–	–
RSTN 1300	1300	1N–500–230–14	1N–400–230–14	1N–230–230–14	–	–	–
RSTN 1600	1600	1N–500–230–15	1N–400–230–15	1N–230–230–15	–	–	–
RSTN 2000	2000	1N–500–230–16	1N–400–230–16	1N–230–230–16	–	–	–
RSTN 2500	2500	1N–500–230–17	1N–400–230–17	1N–230–230–17	–	–	–
RSTN 3000	3000	1N–500–230–18	1N–400–230–18	1N–230–230–18	–	–	–

Model	Total weight	Copper weight	Efficiency $\eta \approx$	KB $\cos \varphi = 0{,}5$	Approx. dimensions in mm						
	kg	kg	%	VA	a	b	c	d	e	f	Attachment
RSTN 50	1,2	0,27	84	90	78	59	90	56	46	2x45	M 4
RSTN 75	1,6	0,29	85	135	85	61	95	64	47	2x46	M 4
RSTN 100	2,1	0,34	86	225	85	75	95	64	61	2x53	M 4
RSTN 130	2,3	0,45	90	300	96	77	104	84	61	50	M 5
RSTN 200	2,9	0,58	92	490	96	87	104	84	70	54	M 5
RSTN 250	3,7	0,66	92	690	96	100	104	84	84	61	M 5
RSTN 320	4,5	0,73	92	850	105	101	111	84	85	62	M 5
RSTN 400	5,2	1,03	93	1100	120	105	120	90	82	58	M 5
RSTN 500	6,9	1,10	94	1510	120	121	120	90	102	69	M 5
RSTN 630	7,8	1,68	94	1700	150	108	147	122	83	57	M 6
RSTN 800	10,0	2,50	95	2550	150	125	147	122	101	65	M 6
RSTN 1000	12,8	2,60	95	3750	150	151	147	122	127	78	M 6
RSTN 1100	12,7	2,80	96	3550	174	129	154	135	97	63	M 6
RSTN 1300	14,7	3,13	96	4390	174	139	154	135	105	68	M 6
RSTN 1600	16,7	3,40	96	5400	174	149	154	135	116	73	M 6
RSTN 2000	22,5	5,00	96	6600	195	156	175	150	125	73	M 8
RSTN 2500	24,0	6,00	96	8000	195	172	175	150	140	85	M 8
RSTN 3000	26,9	6,60	97	10800	195	184	175	150	152	87	M 8

Standard stock items

Subject to technical modifications

Single-phase control transformers comp. to VDE 0570 part 2-2, EN 61558-2-2
Single-phase isolation transformers comp. to VDE 0570 part 2-4, EN 61558-2-4

RSTS 1200 – 8000

Design: Open frame, vertical design, stationary, for installation and set-up in dry rooms, separate windings, sturdy mounting brackets. Connection to non-tracking transformer terminals with screw connection. Up to 20A the secondary bridge contact can be plugged with a plain connector 6.3 x 0.8 mm. The terminals are protected against finger touch or contact with the back of the hand in compliance with accident prevention regulations (VBG 4).

IP 00, suitable for installation up to protection rating IP 23 with natural cooling, insulation class E, max. ambient temperature 40°C.

Fusing recommendation: Below stated fusing recommendations refer to transformer's secondary side and safety fuse cartridges comp. to IEC 127 / EN 60127 (A time-lag), or comp. to IEC 60269 (AgL). Concerning this and also for primary fusing please observe paragraph 'Fusing', catalogue section 'In General'.

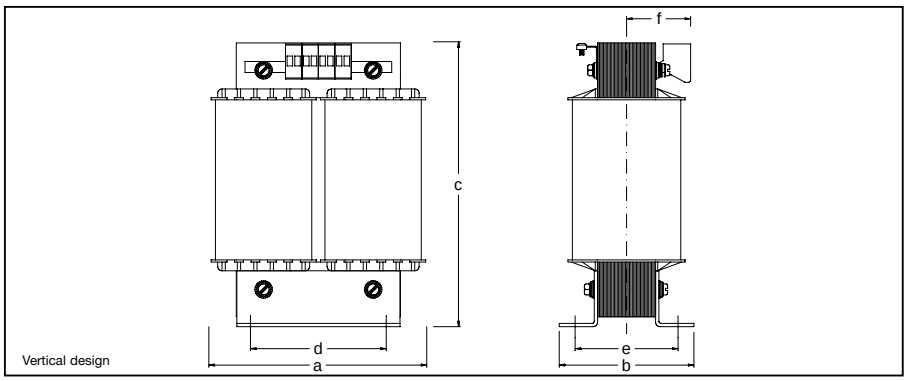

Rated current input

Model	I1 max. in A	I1 max. in A	I1 max. in A
pri. voltage ± 5%	230V	400V	500V
RSTS 1200	5,72	3,30	2,65
RSTS 1500	7,00	4,00	3,30
RSTS 1800	8,18	4,94	3,95
RSTS 2200	10,30	5,98	4,78
RSTS 2500	11,70	6,70	5,43
RSTS 3000	14,00	7,90	6,49
RSTS 4200	19,70	11,40	9,12
RSTS 5000	23,70	13,70	10,90
RSTS 6300	30,00	17,50	13,80
RSTS 8000	38,20	22,10	17,60

Current secondary and fusing recommendation

Model	I2 in A	Fusing A	I2 in A	Fusing A
sec. voltage	230V		115V	
RSTS 1200	5,21	4 At	10,4	8 At
RSTS 1500	6,54	5 At	13,0	10 AgL
RSTS 1800	7,82	6,3 At	15,6	16 AgL
RSTS 2200	9,56	8 At	19,1	16 AgL
RSTS 2500	10,80	8 At	21,7	20 AgL
RSTS 3000	13,00	10 AgL	26,0	20 AgL
RSTS 4200	18,20	16 AgL	36,5	35 AgL
RSTS 5000	21,70	20 AgL	43,4	50 AgL
RSTS 6300	27,30	25 AgL	54,7	50 AgL
RSTS 8000	34,70	35 AgL	69,5	63 AgL

Model	Power VA	KB cos φ 0,5 VA	Efficiency η ≈ %	475/500/525 V 230 V/115 V Article no.	380/400/420 V 230 V/115 V Article no.	220/230/240 V 230 V/115 V Article no.
RSTS 1200	1200	3340	94,1	0021–500–230–01	0022–400–230–01	0023–230–230–01
RSTS 1500	1500	4640	95,0	0021–500–230–02	0022–400–230–02	0023–230–230–02
RSTS 1800	1800	6000	95,5	0021–500–230–03	0022–400–230–03	0023–230–230–03
RSTS 2200	2200	7000	95,6	0021–500–230–04	0022–400–230–04	0023–230–230–04
RSTS 2500	2500	9075	95,8	0021–500–230–05	0022–400–230–05	0023–230–230–05
RSTS 3000	3000	10720	95,8	0021–500–230–06	0022–400–230–06	0023–230–230–06
RSTS 4200	4200	16720	96,4	0021–500–230–07	0022–400–230–07	0023–230–230–07
RSTS 5000	5000	20330	96,8	0021–500–230–08	0022–400–230–08	0023–230–230–08
RSTS 6300	6300	23450	97,0	0021–500–230–09	0022–400–230–09	0023–230–230–09
RSTS 8000	8000	25390	97,2	0021–500–230–10	0022–400–230–10	0023–230–230–10

Model	Size	Copper weight app. kg	Total weight app. kg	Approx. dimensions in mm						
				a	b	c	d	e	f	Attachm.
RSTS 1200	UI 120/ 51	4,40	13,60	160	105	215	100	79	58	M 6
RSTS 1500	UI 120/ 61	4,50	15,00	160	115	215	100	89	63	M 6
RSTS 1800	UI 120/ 75	5,50	17,00	160	129	215	100	103	70	M 6
RSTS 2200	UI 150/ 52	6,60	21,00	200	122	262	124	94	58	M10
RSTS 2500	UI 150/ 65	7,20	24,80	200	135	262	124	107	65	M10
RSTS 3000	UI 150/ 77	7,60	28,00	200	147	262	124	119	71	M10
RSTS 4200	UI 150/ 92	9,20	31,00	200	162	262	124	134	78	M10
RSTS 5000	UI 150/103	12,90	38,50	200	173	262	124	145	83	M10
RSTS 6300	UI 180/ 78	16,80	48,00	240	168	360	144	140	-	M10
RSTS 8000	UI 180/ 93	20,70	57,00	240	183	360	144	155	-	M10

Subject to technical modifications

Short-term delivery

Single-phase control transformers **comp. to VDE 0570 part 2-2, EN 61558-2-2**
Single-phase isolation transformers **comp. to VDE 0570 part 2-4, EN 61558-2-4**

RSTL 1200 – 8000

Design: Open frame, horizontal design, stationary, for installation and set-up in dry rooms, separate windings, sturdy mounting brackets. Connection to non-tracking terminal blocks with screw connection. The terminals are protected against finger touch or contact with the back of the hand in compliance with accident prevention regulations (VBG 4).

IP 00, suitable for installation up to protection rating IP 23 with natural cooling, insulation class E, max. ambient temperature 40°C.

Fusing recommendation: Below stated fusing recommendations refer to transformer's secondary side and safety fuse cartridges comp. to IEC 127 / EN 60127 (A time-lag), or comp. to IEC 60269 (AgL). Concerning this and also for primary fusing please observe paragraph 'Fusing', catalogue section 'In General'.

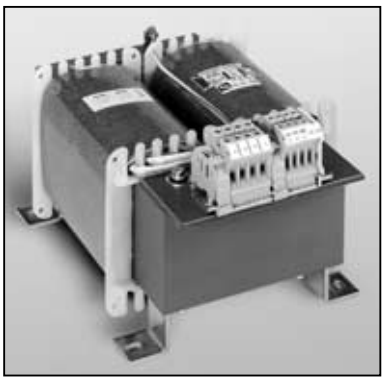

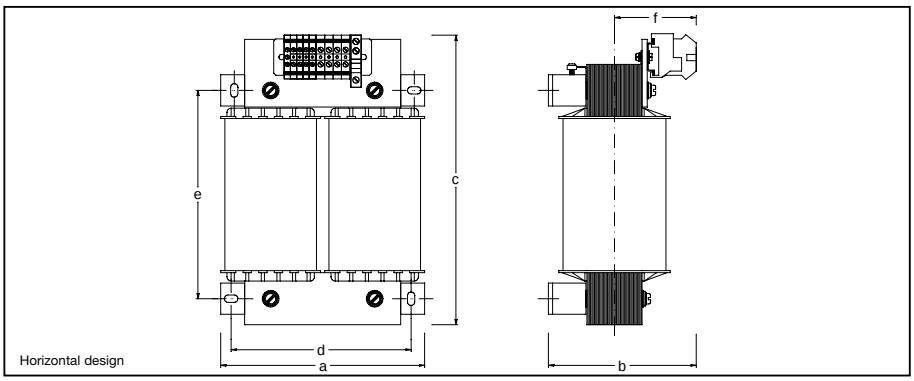

Rated current input

Model	I1 max. in A	I1 max. in A	I1 max. in A
pri. voltage ± 5%	230V	400V	500V
RSTL 1200	5,72	3,30	2,65
RSTL 1500	7,00	4,00	3,30
RSTL 1800	8,18	4,94	3,95
RSTL 2200	10,30	5,98	4,78
RSTL 2500	11,70	6,70	5,43
RSTL 3000	14,00	7,90	6,49
RSTL 4200	19,70	11,40	9,12
RSTL 5000	23,70	13,70	10,90
RSTL 6300	30,00	17,50	13,80
RSTL 8000	38,20	22,10	17,60

Current secondary and fusing recommendation

Model	I2 in A	Fusing A	I2 in A	Fusing A
sec. voltage	230V		115V	
RSTL 1200	5,21	4 At	10,4	8 At
RSTL 1500	6,54	5 At	13,0	10 AgL
RSTL 1800	7,82	6,3 At	15,6	16 AgL
RSTL 2200	9,56	8 At	19,1	16 AgL
RSTL 2500	10,80	8 At	21,7	20 AgL
RSTL 3000	13,00	10 AgL	26,0	20 AgL
RSTL 4200	18,20	16 AgL	36,5	35 AgL
RSTL 5000	21,70	20 AgL	43,4	50 AgL
RSTL 6300	27,30	25 AgL	54,7	50 AgL
RSTL 8000	34,70	35 AgL	69,5	63 AgL

Model	Power VA	KB cos φ 0,5 VA	Efficiency η ≈ %	475/500/525 V 230 V/115 V Article no.	380/400/420 V 230 V/115 V Article no.	220/230/240 V 230 V/115 V Article no.
RSTL 1200	1200	3340	94,1	0024–500–230–01	0025–400–230–01	0026–230–230–01
RSTL 1500	1500	4640	95,0	0024–500–230–02	0025–400–230–02	0026–230–230–02
RSTL 1800	1800	6000	95,5	0024–500–230–03	0025–400–230–03	0026–230–230–03
RSTL 2200	2200	7000	95,6	0024–500–230–04	0025–400–230–04	0026–230–230–04
RSTL 2500	2500	9075	95,8	0024–500–230–05	0025–400–230–05	0026–230–230–05
RSTL 3000	3000	10720	95,8	0024–500–230–06	0025–400–230–06	0026–230–230–06
RSTL 4200	4200	16720	96,4	0024–500–230–07	0025–400–230–07	0026–230–230–07
RSTL 5000	5000	20330	96,8	0024–500–230–08	0025–400–230–08	0026–230–230–08
RSTL 6300	6300	23450	97,0	0024–500–230–09	0025–400–230–09	0026–230–230–09
RSTL 8000	8000	25390	97,2	0024–500–230–10	0025–400–230–10	0026–230–230–10

Model	Size	Copper weight app. kg	Total weight app. kg	Approx. dimensions in mm						
				a	b	c	d	e	f	Attachm.
RSTL 1200	UI 120/ 51	4,40	13,60	166	143	230	146	160	80	M6
RSTL 1500	UI 120/ 61	4,50	15,00	166	153	230	146	160	85	M6
RSTL 1800	UI 120/ 75	5,50	17,00	166	167	230	146	160	92	M6
RSTL 2200	UI 150/ 52	6,60	21,00	200	147	285	174	200	80	M6
RSTL 2500	UI 150/ 65	7,20	24,80	200	160	285	174	200	87	M6
RSTL 3000	UI 150/ 77	7,60	28,00	200	172	285	174	200	93	M6
RSTL 4200	UI 150/ 92	9,20	31,00	200	187	285	174	200	101	M6
RSTL 5000	UI 150/103	12,90	38,50	200	200	285	174	200	106	M6
RSTL 6300	UI 180/ 78	16,80	48,00	240	185	340	204	240	100	M8
RSTL 8000	UI 180/ 93	20,70	57,00	240	200	340	204	240	108	M8

Short-term delivery

Subject to technical modifications

Series REIA

Miniaturized transformers

In general

REIA-transformers can be applied worldwide, meet national and international regulations and are ready for those upcoming. Following designs are available:

Power transformers comp. to **VDE 0570 part 2-1, EN 61558-2-1,**	(15VA...1kVA), > 1kVA = special transformer
Control transformers comp. to **VDE 0570 part 2-2, EN 61558-2-2,**	(30VA and up)
Isolation transformers comp. to **VDE 0570 part 2-4, EN 61558-2-4,**	(sec. 50V up to 500V max.)
Safety transformers comp. to **VDE 0570 part 2-6, EN 61558-2-6,**	(sum total sec. no-load voltages max. 50V)

Please state required design in your order.

Particular advantages of series REIA:

- purchaser may select variable voltages
  (pri. 110V...600V) and (sec. 6V...600V max. 63A)
- high reliability and long service life
- compact construction and low weight
- low total losses, thus high efficiency
  (for example reduction of core losses by two-way layering)
- higher than average output at short-time duty
- high performance in comparison to size
- control transformers feature higher value insulation system than regulation dictates
- high voltage stability because of small voltage drop between no-load and load
- from 130 VA upwards protected against short cut via insulating bushing
- temperature reserves, even at ta 60°C/B full current load possible
- mounting brackets comp. to DIN 41 307

Available accessories: fully integrated ground screw terminal

Short-term delivery

Single-phase power transformers comp. to VDE 0570 part 2-1, EN 61558-2-1
Single-phase control transformers comp. to VDE 0570 part 2-2, EN 61558-2-2
Single-phase isolation transformers comp. to VDE 0570 part 2-4, EN 61558-2-4
Single-phase safety transformers comp. to VDE 0570 part 2-6, EN 61558-2-6

REIA 15 – 3000

Design: Open frame, stationary, for installation and set-up in dry rooms, separate windings, sturdy mounting brackets. Connection to non-tracking transformer terminals with screw connection. For currents above 20A terminal blocks with screw connections may be used also. In this case dimensions b and c increase. The terminals are protected against finger touch or contact with the back of the hand in compliance with accident prevention regulations (VBG 4).

Standard design for translation up to max. 600 V resp. 20A.

Further designs available on request (voltages, currents, connections, mounting etc.).

Ground connection via tab blade connection 6.3 x 0.8 mm. Accessory ground screw connection terminal available.

IP 00, suitable for installation up to protection rating IP 23 with natural cooling, insulation class E, max. ambient temperature 40°C.

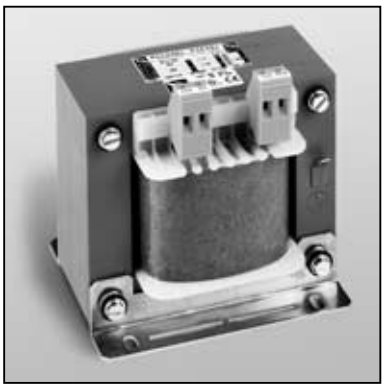

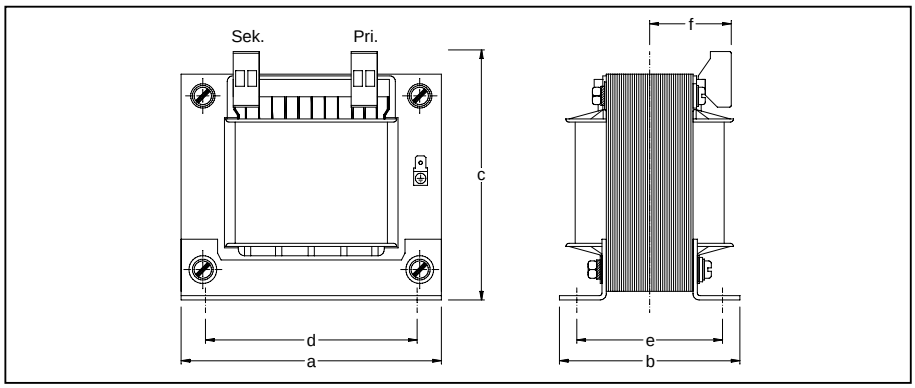

Model	Power	*) Size	Article no.	Copper weight	Total weight	Approx. dimensions in mm						
	VA			app. kg	app. kg	a	b	c	d	e	f	Attachm.
REIA 15	15	EI 54/ 18*	9-001-01	0,07	0,35	55	45	75	44	34	41	M 3
REIA 18	18	EI 60/ 21	9-001-02	0,08	0,45	60	48	80	44	37	43	M 3
REIA 30	30	EI 66/ 23	9-001-03	0,12	0,60	66	53	82	50	41	44	M 4
REIA 40	40	EI 66/ 34	9-001-04	0,15	0,90	66	67	82	50	52	49	M 4
REIA 50	50	EI 78/ 27	9-001-05	0,27	1,20	78	59	90	56	45	45	M 4
REIA 63	63	EI 78/ 36	9-001-06	0,28	1,47	78	69	90	56	54	50	M 4
REIA 75	75	EI 84/ 29	9-001-07	0,29	1,60	85	63	95	64	47	47	M 4
REIA 100	100	EI 84/ 43	9-001-08	0,34	2,10	85	75	95	64	61	53	M 4
REIA 140	140	EI 96/ 35	9-001-09	0,45	2,30	96	77	104	84	61	50	M 5
REIA 145	145	EI 84/ 52	9-001-10	0,52	2,20	85	83	95	64	70	58	M 4
REIA 180	180	EI 105/ 37	9-001-11	0,53	3,00	105	80	111	84	62	51	M 5
REIA 200	200	EI 96/ 45	9-001-12	0,58	2,90	96	87	114	84	70	54	M 5
REIA 250	250	EI 96/ 59	9-001-13	0,66	3,70	96	100	114	84	84	61	M 5
REIA 270	270	EI 105/ 45	9-001-14	0,63	3,50	105	88	111	84	70	55	M 5
REIA 300	300	EI 105/ 55*	9-001-15	0,65	4,00	105	98	103	84	80	60	M 5
REIA 320	320	EI 105/ 60	9-001-16	0,73	4,50	105	101	111	84	85	62	M 5
REIA 330	330	EI 120/ 41	9-001-17	1,00	4,15	120	88	120	90	70	53	M 5
REIA 400	400	EI 120/ 53	9-001-18	1,03	5,20	120	103	120	90	82	58	M 5
REIA 460	460	EI 120/ 61	9-001-19	1,10	6,00	120	110	120	90	90	63	M 5
REIA 500	500	EI 120/ 73	9-001-20	1,10	6,90	120	121	120	90	102	69	M 5
REIA 510	510	EI 135/ 52	9-001-21	1,60	6,45	135	106	133	104	87	58	M 5
REIA 600	600	EI 135/ 62	9-001-22	1,70	7,00	135	116	133	104	97	63	M 5
REIA 630	630	EI 150N/49	9-001-23	1,68	7,80	150	108	147	122	83	57	M 6
REIA 700	700	EI 135/ 72	9-001-24	1,80	7,90	135	123	133	104	107	68	M 5
REIA 800	800	EI 150N/66	9-001-25	2,50	10,00	150	125	147	122	101	65	M 6
REIA 1000	1000	EI 150N/92	9-001-26	2,60	12,80	150	151	147	122	127	78	M 6
REIA 1100	1100	EI 174/ 62	9-001-27	2,80	12,70	174	129	154	135	97	63	M 6
REIA 1300	1300	EI 174/ 72	9-001-28	3,13	14,70	174	139	154	135	105	68	M 6
REIA 1600	1600	EI 174/ 82	9-001-29	3,40	16,70	174	149	154	135	116	73	M 6
REIA 1900	1900	EI 174/102	9-001-30	4,00	21,10	174	169	154	135	136	83	M 6
REIA 2000	2000	EI 192/ 82	9-001-31	4,50	22,50	195	156	175	150	125	73	M 8
REIA 2200	2200	EI 192/ 92*	9-001-32	5,50	23,80	195	166	168	150	134	78	M 8
REIA 2500	2500	EI 192/104	9-001-33	6,00	24,60	195	172	175	150	140	85	M 8
REIA 3000	3000	EI 192/110	9-001-34	6,60	26,90	195	184	175	150	152	87	M 8

Short-term delivery

*) Models without integral attachment bar

Subject to technical modifications

Series URST

Universal control transformers

In general

We recommend universal control transformers in cases of cramped storage space combined with the need for high variety, making the use of many diverse single-phase control transformers insensible.

The multiple choices in primary connection (200...550V) for different mains input voltages featured by universal control transformers, do not allow as optimal a design as control transformers series RSTN or REIA. And bearing the higher purchase price in mind, one should consider prior to ordering, whether applying universal control transformers is necessary, since we guarantee short-term deliveries for special makes also.

Regulations and instructions for single-phase control transformers regarding mechanical and electrical requirements are valid for universal control transformers also. The main difference to single-phase control transformers, apart from the wide range of primary voltages, is the extended secondary range. The provided 2 - 6 output voltages increase application possibilities even further. On output-side, only the current allocated to each winding section may flow in each connection mode (parallel connection 2 x rated current, series connection 1 x rated current).

When this rule is observed, further output voltages can be drawn apart from those stated. However, the rated output for the size in question is no longer achieved in such cases.

Therefore, this solution recommends itself only in individual cases where a different voltage has to be made available quickly.

URST-transformers can be applied worldwide, meet national and international regulations and are ready for those upcoming. Following design is available:

Control transformers comp. to **VDE 0570 part 2-2, EN 61558-2-2,**

Particular advantages of series URST:

- high reliability and long service life
- variable input voltage (200V...550V)
- extended secondary range
- compact construction and low weight
- low total losses, thus high efficiency
  (for example reduction of core losses by two-way layering)
- higher than average output at short-time duty
- high performance in comparison to size
- high voltage stability because of small voltage drop between no-load and load
- from 130 VA upwards protected against short cut via insulating bushing
- temperature reserves, even at ta 60°C/B full current load possible
- mounting brackets comp. to DIN 41 307
- stock items

Fusing recommendation:

Below stated fusing recommendations refer to transformer's secondary side and safety fuse cartridges comp. to IEC 127 / EN 60127 (A time-lag) or comp. to IEC 60269 (AgL). Concerning this and also for primary fusing please observe paragraph 'Fusing', catalogue section 'In General'.

Rated current input

Model	I1 max. in A	I1 max. in A
pri. voltage	200V	550V
URST 100	0,50	0,20
URST 160	0,82	0,30
URST 250	1,30	0,50
URST 320	1,70	0,60
URST 400	2,05	0,75
URST 500	2,60	0,95
URST 630	3,25	1,20
URST 800	4,10	1,50
URST 1000	5,10	1,90
URST 1600	8,10	3,00
URST 2500	13,00	5,00

Current secondary and fusing recommendation

Model	I2 in A	Fusing A	I2 in A	Fusing A	I2 in A	Fusing A	I2 in A	Fusing A
sec. voltage	115V		230V		24-30V (Parallel)		48-60V (Series)	
URST 100	0,86	0,63At	0,43	0,315At	3,33	2,50At	1,66	1,25At
URST 160	1,39	1,00At	0,69	0,50At	5,33	4,00At	2,66	2,00At
URST 250	2,17	1,60At	1,08	0,80At	8,33	6,30At	4,16	3,15At
URST 320	2,78	2,00At	1,39	1,00At	10,66	8,00At	5,33	4,00At
URST 400	3,47	2,50At	1,73	1,25At	13,33	10,0AgL	6,66	5,00At
URST 500	4,34	3,15At	2,17	1,60At	16,66	16,0AgL	8,33	6,30At
URST 630	5,47	4,00At	2,73	2,00At	20,00	16,0AgL	10,50	8,00At
URST 800	6,95	5,00At	3,47	2,50At	26,66	20,0AgL	13,33	10,0AgL
URST 1000	8,69	6,30At	4,34	3,15At	33,33	35,0AgL	16,66	16,0AgL
URST 1600	13,91	10,00At	6,95	5,00At	-	-	-	-
URST 2500	21,73	20,00At	10,86	8,0AgL	-	-	-	-

Subject to technical modifications

Standard stock items

URST 100 – 2500

Design: Open frame, stationary, for installation and set-up in dry rooms, separate windings, sturdy mounting brackets. Connection to non-tracking transformer terminals with screw- and tab connection 2.8 x 0.8 mm up to 5 A, and 6.3 x 0.8 mm up to 20A. According to DIN 46249 tab connection 2.8 x 0.8 mm can only be loaded up to 5 A, and 6.3 x 0.8 up to 20 A. Above 20A terminal blocks with screw connections are used. The terminals are protected against finger touch or contact with the back of the hand in compliance with accident prevention regulations (VBG 4).

IP 00, suitable for installation up to protection rating IP 23 with natural cooling, insulation class E, max. ambient temperature 40°C.

Voltage series:

Interchangeable input connections:

200/220/230/250/270/280/330/350/370/380/390/400/420/430/440/450/470/490/500/550V

Interchangeable output connections:

115/230V resp. 21/24/30//42/48/60V

Corresponding to connection diagram on rating plate, transformers are to be operated partly in parallel- or series connection.

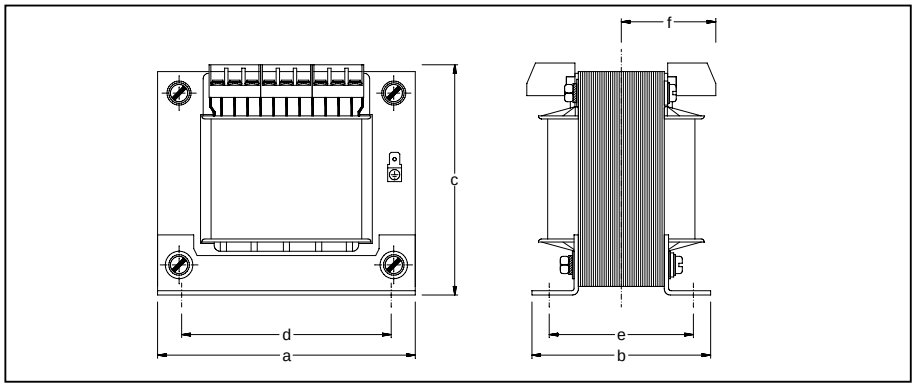

Model	Power VA	KB cos φ 0,5 VA	Efficiency η ≈ %	200..550 V 115/230 V Article no.	200...550 V 21/24/30 V Article no.
URST 100	100	225	88	4–550–230–01	4–550–030–01
URST 160	160	640	92	4–550–230–02	4–550–030–02
URST 250	250	800	93	4–550–230–03	4–550–030–03
URST 320	320	1100	93,5	4–550–230–04	4–550–030–04
URST 400	400	1250	94	4–550–230–05	4–550–030–05
URST 500	500	1700	94,5	4–550–230–06	4–550–030–06
URST 630	630	2550	95	4–550–230–07	4–550–030–07
URST 800	800	3550	95,5	4–550–230–08	4–550–030–08
URST 1000	1000	4400	96	4–550–230–09	4–550–030-09
URST 1600	1600	5300	96	4–550–230–10	-
URST 2500	2500	9000	97	4–550–230–11	-

Model	Copper weight	Total weight	Approx. dimensions in mm						
	app. kg	app. kg	a	b	c	d	e	2 x f	Attachment
URST 100	0,45	2,00	85	76	85	64	61	2x48	M 4
URST 160	0,75	3,80	105	88	103	84	70	2x56	M 5
URST 250	0,80	4,50	120	88	114	90	71	2x54	M 5
URST 320	1,30	5,30	120	100	114	90	82	2x60	M 5
URST 400	1,50	6,00	120	106	114	90	90	2x64	M 5
URST 500	1,90	7,80	150	108	138	122	87	2x59	M 6
URST 630	2,80	10,10	150	125	138	122	101	2x66	M 6
URST 800	2,90	14,30	174	129	148	135	97	2x64	M 6
URST 1000	3,20	15,70	174	138	148	135	107	2x69	M 6
URST 1600	7,00	25,00	205	154	168	150	124	2x74	M 8
URST 2500	10,00	32,40	205	172	168	150	141	2x82	M 8

Standard stock items

Subject to technical modifications

Series RSST

Anti-interference transformers with special screening

In general

RSST-transformers can be applied worldwide, meet national and international regulations and are ready for those upcoming. Following designs are available:

Control transformers comp. to **VDE 0570 part 2-2, EN 61558-2-2,**

Isolation transformers comp. to **VDE 0570 part 2-4, EN 61558-2-4,**

Particular advantages of series RSST:

- high reliability and long service life
- compact construction and low weight
- wide band interference pulse suppression
- low total losses, thus high efficiency
  (for example reduction of core losses by two-way layering)
- higher than average output at short-time duty
- high performance in comparison to size
- high voltage stability because of small voltage drop between no-load and load
- voltage adaptation via +-5% tabs
- from 130 VA upwards protected against short cut via insulating bushing
- temperature reserves, even at ta 60°C/B full current load possible
- mounting brackets comp. to DIN 41 307
- stock items

Transmission loss, example model RSST 160

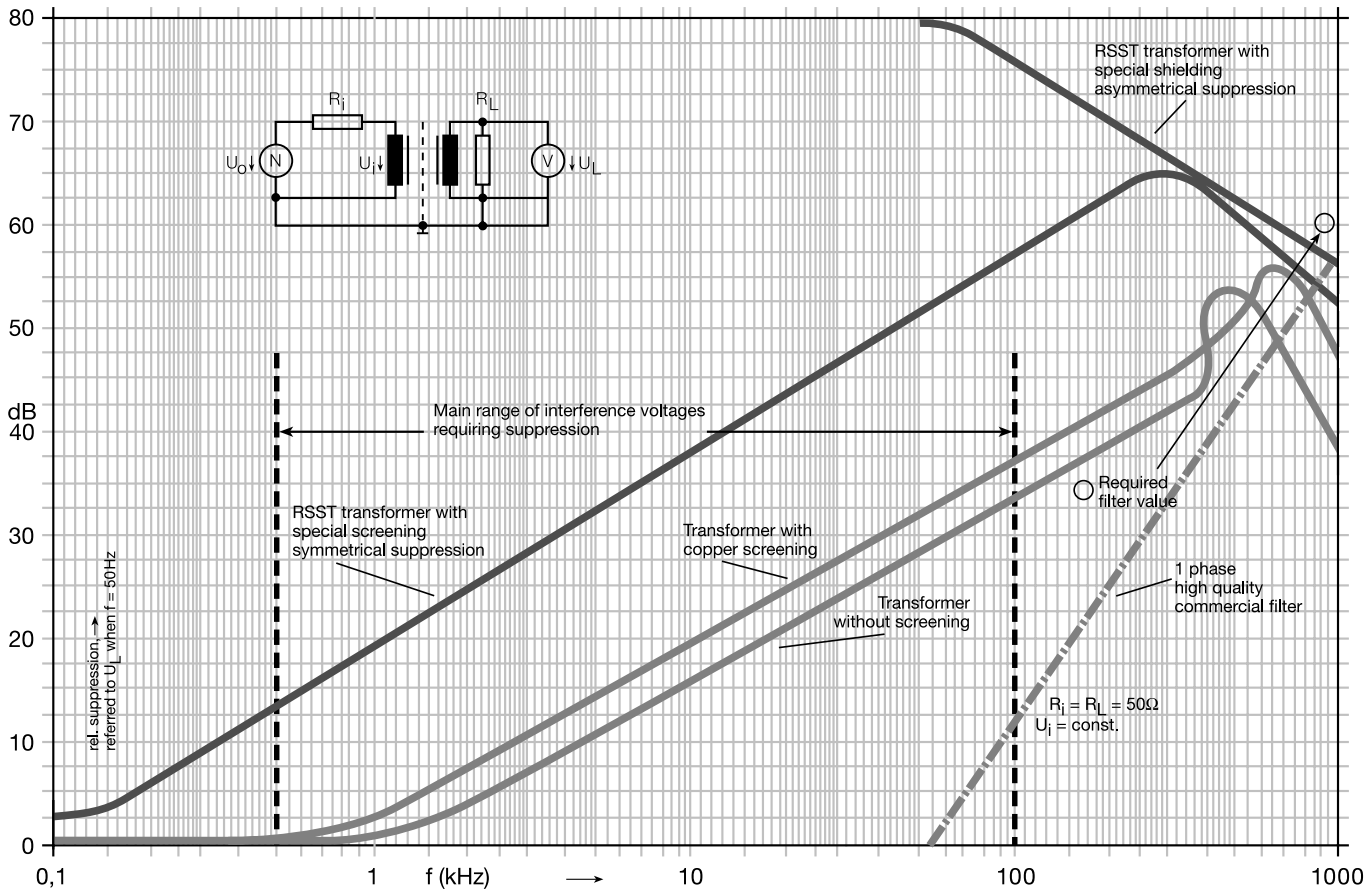

Available accessories: fully integrated ground screw terminal

Standard stock items

Single-phase control transformers **comp. to VDE 0570 part 2-2, EN 61558-2-2**
Single-phase isolation transformers **comp. to VDE 0570 part 2-4, EN 61558-2-4**

RSST 100 – 1000

In general: Riedel anti-interference control transformers guarantee excellent, wide band interference voltage suppression of both symmetrical and asymmetrical factors.

The graph on previous page shows a typical suppression progress dependent on frequency, as an example portrayed by anti-interference control transformer RSST 160. Its' special sreening increases the standard high-frequency transmission loss of a 50 Hz transformer by about 20 dB. The special shielding of high permeability is a protected development by our company. Not only can it be applied in the active anti-interference transformer but also to increase suppression in all other products using a transformer with indirect-coupled windings.

Design: Open frame, stationary, for installation and set-up in dry rooms, separate windings, sturdy mounting brackets. Connection to non-tracking transformer terminals with screw- and tab connection 2.8 x 0.8 mm up to 5 A, and 6.3 x 0.8 mm at higher current. According to DIN 46249 tab connection 2.8 x 0.8 mm can only be loaded up to 5 A, and 6.3 x 0.8 up to 20 A. The terminals are protected against finger touch or contact with the back of the hand in compliance with accident prevention regulations (VBG 4). Ground connection via tab blade connection 6.3 x 0.8 mm. Accessory ground screw connection terminal available.

IP 00, suitable for installation up to protection rating IP 23 with natural cooling, insulation class E, max. ambient temperature 40°C.

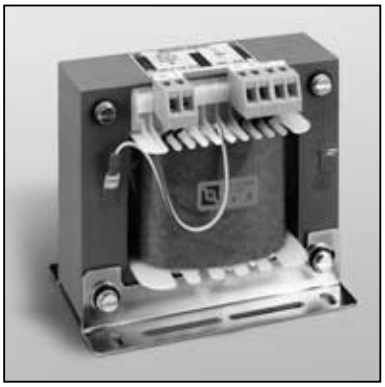

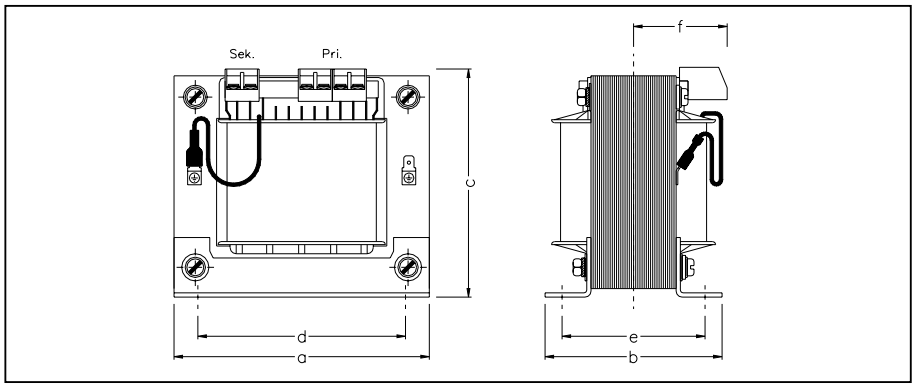

Fusing recommendation:

Below stated fusing recommendations refer to transformer's secondary side and safety fuse cartridges comp. to IEC 127 / EN 60127 (A time-lag). Concerning this and also for primary fusing please observe paragraph 'Fusing', catalogue section 'In General'.

Rated current input

Model	I1 max. in A
pri. voltage	220/230/240 V
RSST 100	0,48
RSST 130	0,62
RSST 160	0,75
RSST 250	1,15
RSST 320	1,50
RSST 400	1,90
RSST 500	2,30
RSST 630	3,00
RSST 800	3,70
RSST 1000	4,70

Current secondary and fusing recommendation

Model	I2 in A	Fusing A
sec. voltage	230V	
RSST 100	0,43	0,315 At
RSST 130	0,56	0,40 At
RSST 160	0,69	0,63 At
RSST 250	1,08	0,80 At
RSST 320	1,39	1,00 At
RSST 400	1,73	1,25 At
RSST 500	2,17	1,60 At
RSST 630	2,73	2,00 At
RSST 800	3,47	2,50 At
RSST 1000	4,34	3,15 At

Model	Size	Total weight	Copper weight	220/230/240 V 230 V	Efficiency $\eta \approx$	KB $\cos\varphi = 0{,}5$	Approx. dimensions in mm						
	VA	app. kg	app. kg	Article no.	%	VA	a	b	c	d	e	f	Attachment
RSST 100	100	2,1	0,35	47–230–230–01	88	225	85	75	85	64	61	53	M 4
RSST 130	130	3,0	0,53	47–230–230–02	92	445	105	78	102	84	63	50	M 5
RSST 160	160	3,5	0,63	47–230–230–03	93	640	105	86	102	84	70	54	M 5
RSST 250	250	4,2	0,93	47–230–230–04	93	800	120	89	114	90	70	52	M 5
RSST 320	320	5,2	1,03	47–230–230–05	93,5	1100	120	105	114	90	82	58	M 5
RSST 400	400	6,0	1,10	47–230–230–06	94	1250	120	109	114	90	90	62	M 5
RSST 500	500	7,8	1,68	47–230–230–07	94,5	1700	150	108	138	122	83	57	M 6
RSST 630	630	10,0	2,50	47–230–230–08	95	2550	150	125	138	122	101	65	M 6
RSST 800	800	12,7	2,80	47–230–230–09	95,5	3550	174	129	148	135	97	63	M 6
RSST 1000	1000	14,7	3,13	47–230–230–10	96	4400	174	139	148	135	105	68	M 6

Standard stock items **Other voltages on request** Subject to technical modifications

Single-phase power transformers comp. to VDE 0570 part 2-1, EN 61558-2-1
Single-phase control transformers comp. to VDE 0570 part 2-2, EN 61558-2-2
Single-phase isolation transformers comp. to VDE 0570 part 2-4, EN 61558-2-4
Single-phase safety transformers comp. to VDE 0570 part 2-6, EN 61558-2-6

RUE 280 – 20000

In general:

RUE-transformers can be applied worldwide, meet national and international regulations and are ready for those upcoming. Choose from following designs:

Power transformers comp. to **VDE 0570 part 2-1, EN 61558-2-1,**	(280VA...1kVA), > 1kVA = special transformer
Control transformers comp. to **VDE 0570 part 2-2, EN 61558-2-2,**	(280VA and up)
Isolation transformers comp. to **VDE 0570 part 2-4, EN 61558-2-4,**	(sec. 50V and up)
Safety transformers comp. to **VDE 0570 part 2-6, EN 61558-2-6,**	(sum total sec. no-load voltages max. 50V)

Please state required design in your order.

Design:

Open frame, vertical design, stationary, for installation and set-up in dry rooms, separate windings, sturdy mounting brackets. Connection to non-tracking transformer terminals with screw connection. Above 20A transformer terminal blocks or terminal blocks with screw connections are used, (dimensions b1 and c1 increase). The terminals are protected against finger touch or contact with the back of the hand in compliance with accident prevention regulations (VBG 4).

Standard design for translation up to max. 550 V resp. 65A.

Further designs available on request (voltages, currents, connections, mounting etc.).

IP 00, suitable for installation up to protection rating IP 23 with natural cooling, insulation class E, max. ambient temperature 40°C.

Below stated dimensions and weights may show currently valid standards only. They remain subject to change.

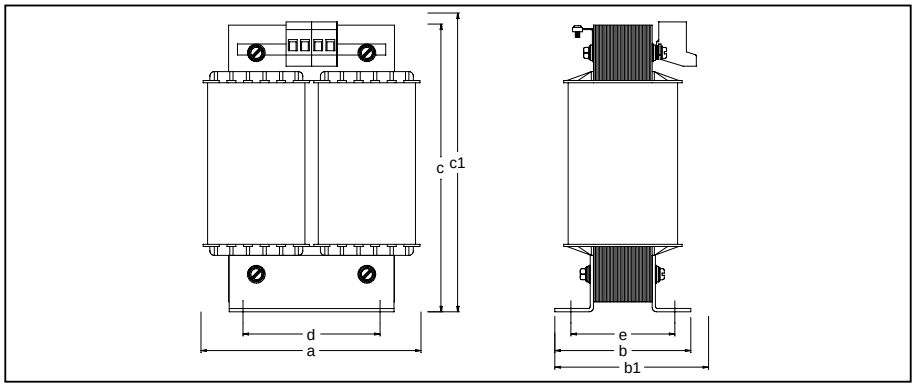

Model	Power VA	Size	Article no.	Copper weight app. kg	Total weight app. kg	Approx. dimensions in mm							
						a	b	b 1	c	c 1	d	e	Attachm.
RUE 280	280	UI 75/ 41	0059-00000280	0,95	3,60	100	81	98	132	197	63	64	M 5
RUE 630	630	UI 90/ 51	0059-00000630	1,65	6,30	120	95	113	157	222	76	76	M 6
RUE 980	980	UI 102 / 57	0059-00000980	2,50	7,70	140	103	117	177	242	76	87	M 6
RUE 1200	1200	UI 120 / 51	0059-00001200	4,40	13,60	160	105	117	208	273	100	79	M 6
RUE 1400	1400	UI 114 / 64	0059-00001400	3,50	13,00	154	114	129	198	263	100	95	M 6
RUE 1500	1500	UI 120 / 61	0059-00001500	4,50	15,00	160	115	127	208	273	100	89	M 6
RUE 1800	1800	UI 120 / 75	0059-00001800	5,50	17,00	160	129	141	208	273	100	103	M 6
RUE 2000	2000	UI 132 / 72	0059-00002000	5,85	20,00	178	132	143	228	293	112	102	M 8
RUE 2200	2200	UI 150 / 52	0059-00002200	6,60	21,00	200	122	128	260	325	124	94	M 8
RUE 2500	2500	UI 150 / 65	0059-00002500	7,20	24,80	200	135	141	260	325	124	107	M 8
RUE 3000	3000	UI 150 / 77	0059-00003000	7,60	28,00	200	147	153	260	325	124	119	M 8
RUE 4200	4200	UI 150 / 92	0059-00004200	9,20	31,00	200	162	168	260	325	124	134	M 8
RUE 5000	5000	UI 150 /103	0059-00005000	12,90	38,50	200	173	180	260	325	124	145	M 8
RUE 6000	6000	UI 168 / 92	0059-00006000	15,00	42,00	228	172	175	287	352	136	144	M 8
RUE 6300	6300	UI 180 / 78	0059-00006300	16,80	48,00	240	168	168	305	370	144	140	M 8
RUE 8000	8000	UI 180 / 93	0059-00008000	20,70	57,00	240	183	183	305	370	144	155	M 8
RUE 10000	10000	UI 210 / 88	0059-00010000	29,10	78,00	280	188	188	360	425	176	158	M10
RUE 13000	13000	UI 210 /103	0059-00013000	33,00	89,00	280	203	203	360	425	176	173	M10
RUE 16000	16000	UI 210 /133	0059-00016000	41,90	112,00	280	233	233	360	425	176	203	M10
RUE 20000	20000	UI 240/140	0059-00020000	42,00	129,00	320	250	250	410	475	196	214	M14

Subject to technical modifications

Short-term delivery

REST 20 – 120

In general:

The rectangular core stacks of our single-phase high-power transformers are made of two-layered grain-oriented low-loss strips. The windings consist of high-grade insulated double-lacquered massive copper. Core and windings are vacuum impregnated together and subsequently baked in the drying oven for several hours.

The transformer's electrical design ensures best possible efficiency and a temperature rise remaining far below the limits specified in regulation VDE. A sound design guarantees almost unlimited service life even at occurring overload.

REST-transformers can be applied worldwide, meet national and international regulations and are ready for those upcoming. Following design is available:

High-power transformers comp. to VDE 0532

Design:

Open frame, vertical design, stationary, for installation and set-up in dry rooms, separate windings, sturdy mounting brackets. Connection to robust terminal blocks (up to 450 A) resp. studs, line bars or cable lugs (not measured). Maximal voltage (phase-phase) 2000V.

IP 00, suitable for installation up to protection rating IP 23 with natural cooling, max. ambient temperature 40°C.

Insulation class F (average value temperature 140°C)

Attention: higher thermal load at lower efficiency

Because each high power transformer is individually designed, below stated dimensions and weights may show the currently valid state only.

Subject to modifications

We manufacture single-phase high-power transformers in all requested protection classes up to IP 65.

All types may be delivered as single-phase auto-transformers also (please find calculation method in section 'transformers in economy winding', catalogue part 'In General').

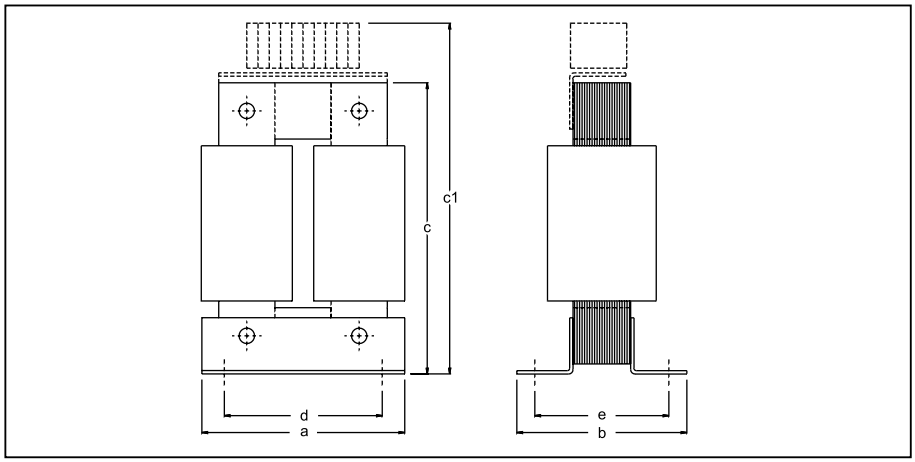

* depending on design and winding type of special currents all measurement may vary, especially measurement b may enlarge up to 10mm!
Measurment d and e on request

Model	Power kVA	Article no.	Copper weight app. kg	Total weight app. kg	Approx. dimensions in mm			
					a	b*	c	c1 up to 63A
REST 20	20,0	0058-00-00020	on request	140	360	240	420	c+100
REST 25	25,0	0058-00-00025	on request	170	360	260	420	c+100
REST 30	30,0	0058-00-00030	on request	200	360	265	420	c+100
REST 40	40,0	0058-00-00040	on request	250	360	265	460	c+100
REST 50	50,0	0058-00-00050	on request	300	400	260	570	c+150
REST 63	63,0	0058-00-00063	on request	340	400	290	570	c+150
REST 80	80,0	0058-00-00080	on request	380	400	300	570	c+150
REST 100	100,0	0058-00-00100	on request	460	440	320	620	c+150
REST 120	120,0	0058-00-00120	on request	580	520	360	660	c+150

Short-term delivery **higher powers on request** Subject to technical modifications

RLTS 80 – 900

Single-phase auto transformers for single-phase fan-motors

In general: Transformers series RLTS are single-phase auto transformers featuring 7 stages and were specially designed for air conditioning and air engineering. Following design is available:

Auto transformers comp. to **VDE 0570**

Design: Open frame, stationary, for installation and set-up in dry rooms, economy winding, sturdy mounting brackets. Connection to non-tracking transformer terminals with screw- and tab connection 2.8 x 0.8 mm up to 5 A, and 6.3 x 0.8 mm up to 20A. According to DIN 46249 tab connection 2.8 x 0.8 mm can only be loaded up to 5 A, and 6.3 x 0.8 up to 20 A. Above 20A terminal blocks with screw connections are used. The terminals are protected against finger touch or contact with the back of the hand in compliance with accident prevention regulations (VBG 4).

Ground connection via tab blade connection 6.3 x 0.8 mm. Accessory ground screw connection terminal available.

IP 00, suitable for installation up to protection rating IP 23 with natural cooling, insulation class E, max. ambient temperature 40°C.

Voltage range: Input voltage: 230 V
Output voltages: 80/100/125/150/175/190/230 V

Special design: Series RLTS is also available in housing protection class IP 23 with following option:
Option: multicontact switch, operation indication lamp, housing etc. (prices on request).

Further designs available on request (voltages, currents, connections, mounting etc.).

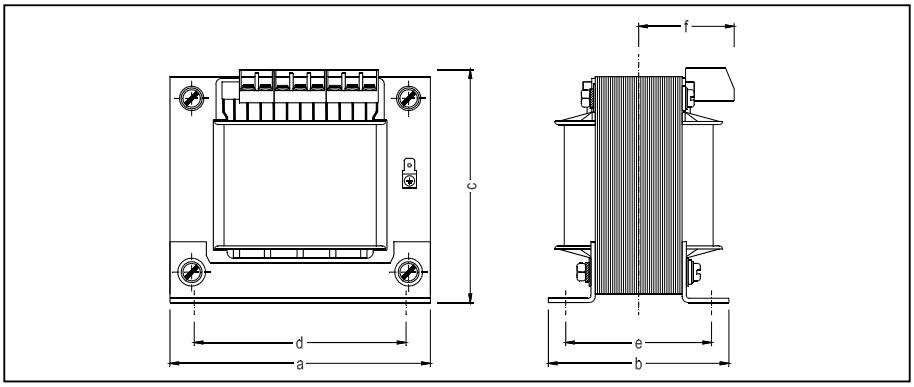

Model	Current	Article no.	Total weight	Copper weight	Approx. dimensions in mm						
	A		app. kg	app. kg	a	b	c	d	e	f	Attachment
RLTS 80	1,45	50–230–01	1,47	0,28	78	67	80	56	54	47	M 4
RLTS 115	2,10	50–230–02	2,00	0,35	85	75	85	64	61	53	M 4
RLTS 220	4,00	50–230–03	3,50	0,63	105	86	103	84	70	53	M 5
RLTS 410	7,50	50–230–04	5,50	1,10	120	105	112	90	82	58	M 5
RLTS 600	11,00	50–230–05	8,00	1,80	150	108	136	122	83	57	M 6
RLTS 710	13,00	50–230–06	10,00	2,60	150	130	136	122	101	65	M 6
RLTS 900	16,50	50–230–07	13,50	2,80	150	156	136	122	127	78	M 6
RLTS 1090	20,00	50–230–08	13,10	2,90	174	129	149	135	96	63	M 6
RLTS 1310	24,00	50–230–09	17,50	3,50	174	149	149	135	116	73	M 6
RLTS 1745	32,00	50–230–10	21,10	4,00	174	169	149	135	136	83	M 6

Subject to technical modifications

Short-term delivery

Single-phase isolation transformers **comp. to VDE 0570 part 2-4, EN 61558-2-4**
Single-phase safety transformers **comp. to VDE 0570 part 2-6, EN 61558-2-6**

RGTT 500 – 3000

Portable transformers

In general: Single-phase isolation transformers RGTT are compounded into non-hygroscope plastic cases specially designed for the electrical industry. They are shock resistant and self-extinguishing.

The unit's input features a 230V supply line (2 m long) inclusive plug, an inrush current limitation and an exchangeable external fuse.

The output is equipped with an earthing contact socket called Schuko (230V) or an attachment socket type CEE. Output current drains are dictated by CEEform regulation DIN VDE 0623, EN 60309.

Attention: Earthing contact primary and secondary not connected!

Design secondary up to	25V	50/60Hz max.	32A
Design secondary up to	110V	50/60Hz max.	32A
Design secondary up to	230V	50/60Hz max.	16A

Please state secondary voltage in your order also.

Design: IP 44, protection class II, max. ambient temperature 40°C.

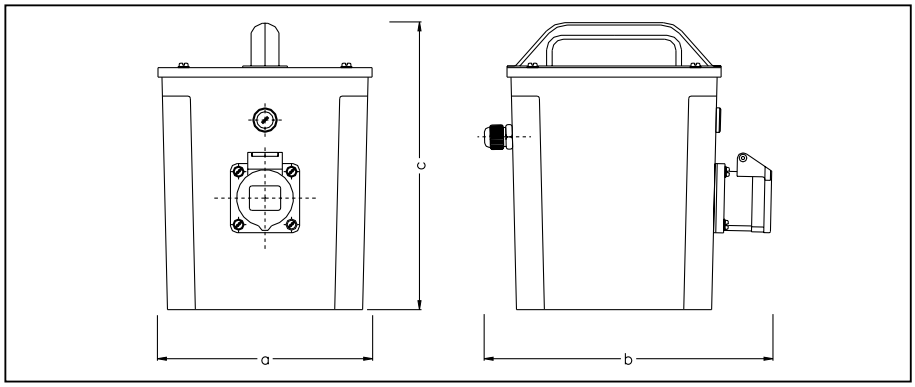

Design secondary output:

Model	sec. up to 25 V	sec. up to 50 V	sec. up to 110 V	sec. 230 V	sec. 230 V
RGTT 500	1 x CEE 32A	1 x CEE 16A	1 x CEE 16A	1 x CEE 16A	1 x Schuko 16A
RGTT 800	1 x CEE 32A	1 x CEE 16A	1 x CEE 16A	1 x CEE 16A	1 x Schuko 16A
RGTT 1000	2 x CEE 32A	1 x CEE 32A	1 x CEE 16A	1 x CEE 16A	1 x Schuko 16A
RGTT 1600	–	2 x CEE 32A	1 x CEE 16A	1 x CEE 16A	1 x Schuko 16A
RGTT 2000	–	2 x CEE 32A	1 x CEE 32A	1 x CEE 16A	1 x Schuko 16A
RGTT 2500	–	2 x CEE 32A	1 x CEE 32A	1 x CEE 16A	1 x Schuko 16A
RGTT 3000	–	2 x CEE 32A	1 x CEE 32A	1 x CEE 16A	1 x Schuko 16A

Model	Power	Article no.	Article no.	Copper weight	Total weight	Approx. dimensions in mm		
	VA	24V-230V (CEE)	230V (Schuko)	kg	kg	a	b	c
RGTT 500	500	0010-60020-01	0011-60021-01	1,10	10,0	166	250	219
RGTT 800	800	0010-60020-02	0011-60021-02	2,50	14,5	192	276	259
RGTT 1000	1000	0010-60020-03	0011-60021-03	2,60	17,5	192	276	259
RGTT 1600	1600	0010-60020-04	0011-60021-04	3,40	23,0	198	282	271
RGTT 2000	2000	0010-60020-05	0011-60021-05	5,00	31,5	340	265	280
RGTT 2500	2500	0010-60020-06	0011-60021-06	6,00	34,0	340	265	280
RGTT 3000	3000	0010-60020-07	0011-60021-07	6,60	37,5	340	265	280

Short-term delivery

Subject to technical modifications

Copyright: Deutsche Bundesbahn/Riedel

Product group

B

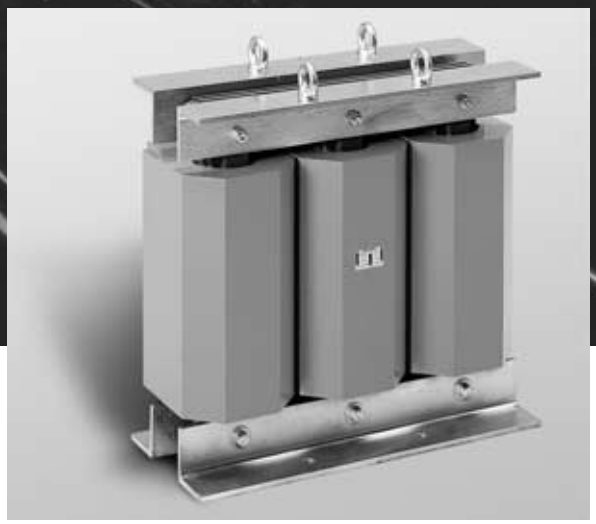

The safety of rail traffic and the punctuality of trains are of prime importance to German Rail. Extensive electric and electronic switch plants guarantee smooth running around the clock. German Rail cannot afford breakdowns in its power supply - a good reason to use Riedel products.

Three-phase transformers

Load capacity of neutral point (star point):

Regarding neutral point load capacity of three-phase transformers, observe below following to avoid additional losses and neutral point shifting:

Star-star connection:

The neutral point may only be loaded with full rated current (line-to-line current), when neutral conductor of supply line is connected rigidly to primary neutral point of transformer. Otherwise, neutral point may only be loaded with app. 10% line-to-line current.

The same rule applies for three-phase auto transformers in star-economy design.

Taking no special measures, following connection modes amount to 100% load of neutral point:

Delta-star connection with secondary extended neutral point Dy5
Star-zigzag connection with secondary extended neutral point Yz5

If three-phase sets are formed via 3 single-phase transformers, then load of neutral point must definitely be avoided.

Vector groups

The vector group marks the circuitry of windings and their phase position to each other. It consists of a capital and small letter plus a code number.

The capital letter refers to the input winding, the small to the output winding. The upper voltage is marked by 1 in front, the undervoltage by a 2 in front, regardless of input- or output voltage. A 1 in back on the contrary, marks the beginning of a winding, a 2 in back the end. Tabs are marked 3 and 4 in back. The numbers correlate to letters U V W and distinguish the 3 phases. The neutral point (star point) is always marked N.

The most common vector groups are summarized alongside, input left-hand, output right-hand.

Unless otherwise requested, three-phase transformers are preferentially delivered in star-star connection.

If on secondary side, in relation to the primary side, higher currents at smaller voltages are needed, preferentially Yd5 / Yd11 is used because of the winding cross sections.

Designation Code no.	Vector group	Vector diagram	Circuit configuration	Secondary star point
0	Dd0	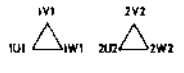	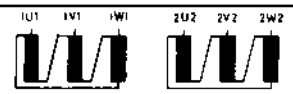	none
	Yy0	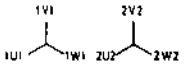		10% load capacity
	Dz0	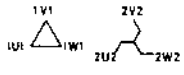	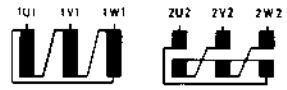	full load capacity
5	Dy5	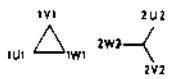	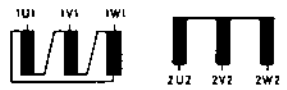	full load capacity
	Yd5	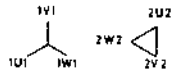		none
	Yz5	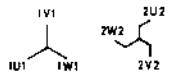	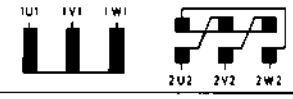	full load capacity
6	Dd6	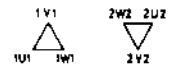	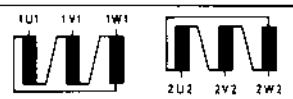	none
	Yy6	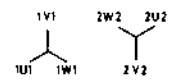	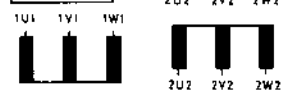	10% load capacity
	Dz6	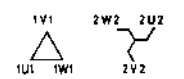	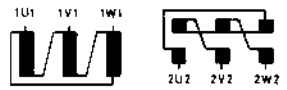	full load capacity
11	Dy11	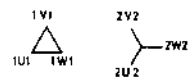	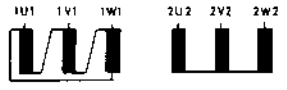	full load capacity
	Yd11	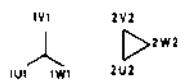		none
	Yz11	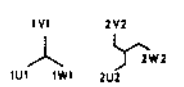	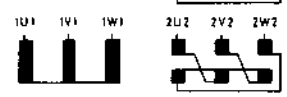	full load capacity
0	Ya0	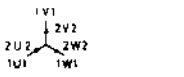		10% load capacity

RDLTS 95 – 1800

Single-phase auto transformers in V-circuit arrangement for three-phase fan-motors (1 set consisting of 2 individual transformers)

In general: Transformers series RDLTS are single-phase auto transformers featuring 5 stages and were specially designed for air conditioning and air engineering. Following design is available:

Auto transformers comp. to **VDE 0570**

Design: Open frame, stationary, for installation and set-up in dry rooms, economy winding, sturdy mounting brackets. Connection to non-tracking transformer terminals with screw- and tab connection 2.8 x 0.8 mm up to 5 A, and 6.3 x 0.8 mm up to 20A. According to DIN 46249 tab connection 2.8 x 0.8 mm can only be loaded up to 5 A, and 6.3 x 0.8 up to 20 A. Above 20A terminal blocks with screw connections are used. The terminals are protected against finger touch or contact with the back of the hand in compliance with accident prevention regulations (VBG 4).

Ground connection via tab blade connection 6.3 x 0.8 mm. Accessory ground screw connection terminal available.

IP 00, suitable for installation up to protection rating IP 23 with natural air self-cooling, insulation class E, max. ambient temperature 40°C.

Voltage range: Input voltage: 400V 3~
Output voltages: 140/180/230/280/400V

Special design: Series RDLTS is also available in housing protection class IP 23 with following option:

Option: multicontact switch, operation indication lamp, housing etc. (prices on request).

Further designs available on request (voltages, currents, connections, mounting etc.).

V-circuit:

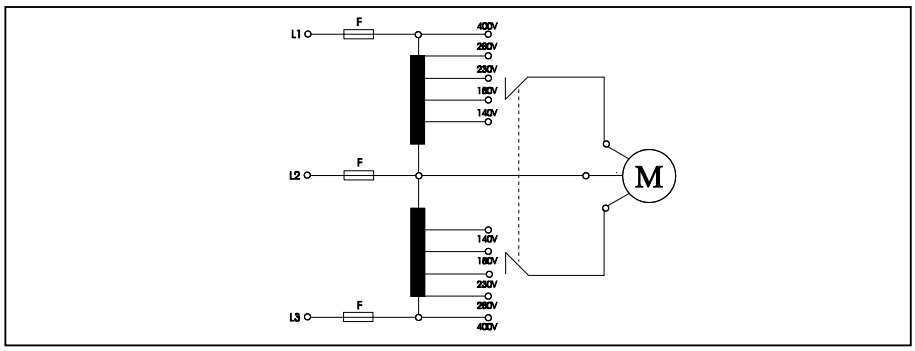

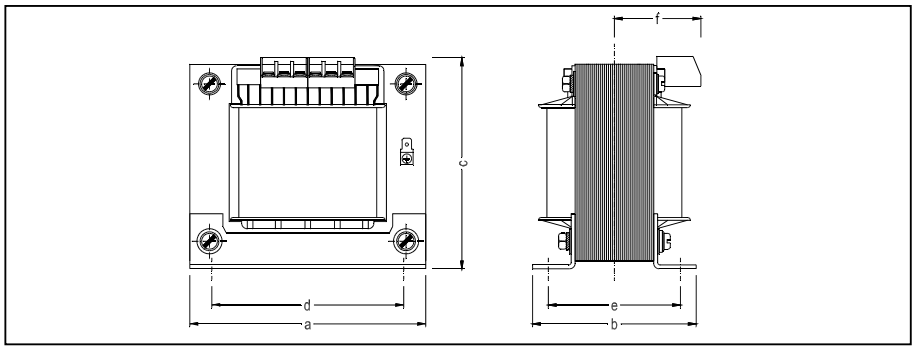

Model	Current	Article no.	Copper weight	Total weight	Approx. dimensions in mm						
	A		kg/set	kg/set	a	b	c	d	e	f	Attachment
RDLTS 95	1,0	51–400–01	0,6	4,0	78	67	80	56	54	47	M 4
RDLTS 190	2,0	51–400–02	1,4	6,8	105	78	103	84	62	49	M 4
RDLTS 285	3,0	51–400–03	1,8	7,8	105	86	103	84	70	53	M 4
RDLTS 380	4,0	51–400–04	2,2	13,0	120	93	112	90	70	52	M 5
RDLTS 475	5,0	51–400–05	4,0	14,6	120	105	112	90	82	58	M 5
RDLTS 660	7,0	51–400–06	7,1	17,1	150	108	136	122	83	57	M 6
RDLTS 950	10,0	51–400–07	10,9	20,2	150	124	136	122	101	65	M 6
RDLTS 1330	14,0	51–400–08	12,4	28,4	174	139	149	135	106	68	M 6
RDLTS 1800	19,0	51–400–09	18,0	40,1	174	169	149	135	136	83	M 6
RDLTS 2465	26,0	51–400–10	23,0	44,0	195	175	188	150	110	68	M 8
RDLTS 3410	36,0	51–400–11	36,0	58,0	231	182	218	180	114	68	M10

Short-term delivery

Subject to technical modifications

Three-phase power transformers **comp. to VDE 0570 part 2-1, EN 61558-2-1**
Three-phase isolation transformers **comp. to VDE 0570 part 2-4, EN 61558-2-4**
Three-phase safety transformers **comp. to VDE 0570 part 2-6, EN 61558-2-6**

DRUE 50 - 36000 (Insulation class E)
DRUF 6000 - 40000 (Insulation class F)

In general: Transformers DRUE and DRUF can be applied worldwide, meet national and international regulations and are ready for those upcoming. Choose from following designs:

Power transformers comp. to **VDE 0570 part 2-1, EN 61558-2-1,**	(50VA...1kVA), < 1kVA = special transformer
Isolation transformers comp. to **VDE 0570 part 2-4, EN 61558-2-4,**	(sec. 50V and up)
Safety transformers comp. to **VDE 0570 part 2-6, EN 61558-2-6,**	(sum total sec. no-load voltages max. 50V)

Please state required design in your order.

Design: Open frame, vertical design, stationary, for installation and set-up in dry rooms, separate windings, sturdy mounting brackets. Connection to non-tracking transformer terminals with screw connection. Above 60A non-tracking terminal blocks are mounted on head angles (attention: dimensions b and c will increase, not stated below). The terminals are protected against finger touch or contact with the back of the hand in compliance with accident prevention regulations (VBG 4).

Standard design for translation up to max. 550 V resp. 105A.

Further designs available on request (voltages, currents, connections, mounting etc.).

IP 00, suitable for installation up to protection rating IP 23 with natural air self-cooling, max. ambient temperature 40°C.

Insulation class E (average value temperature 115°C)

Insulation class F (average value temperature 140°C)

Attention: Higher thermal stress at lower efficiency

We manufacture these three-phase miniaturized transformers in all requested protection classes up to IP 65.

All types are also available as three-phase auto transformers (please find calculation method in catalogue section 'In general', paragraph 'Transformers in economy winding').

Preferential circuitry: YNyn0; Dyn 5; Yd5

Model with transformer terminals - usually up to 60A

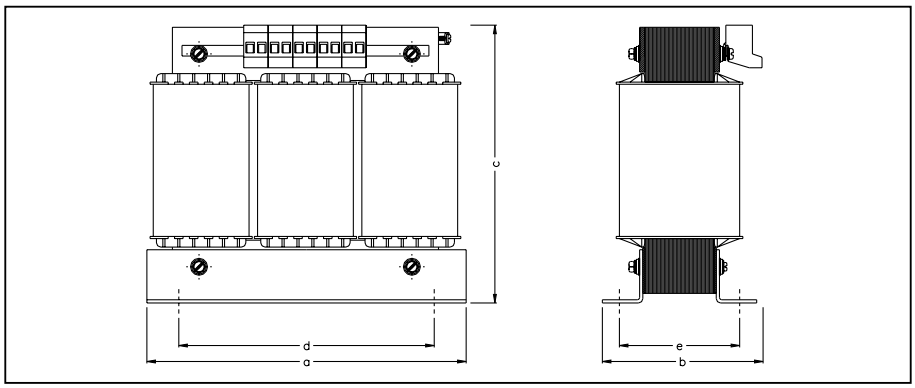

Model with terminal blocks - above 60A

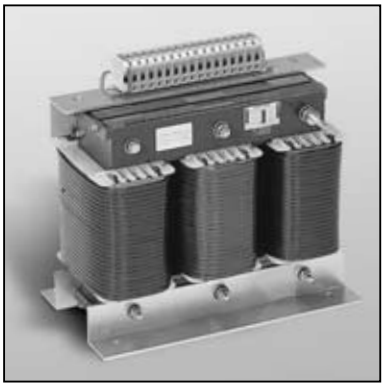

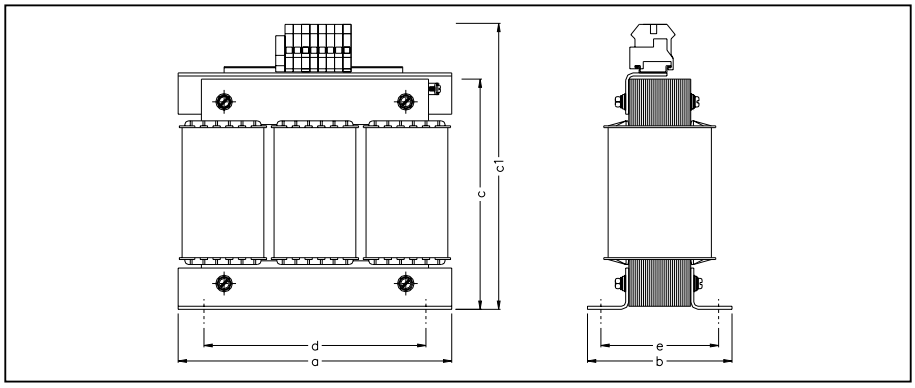

Subject to technical modifications

Short-term delivery

Three-phase power transformers comp. to VDE 0570 part 2-1, EN 61558-2-1
Three-phase isolation transformers comp. to VDE 0570 part 2-4, EN 61558-2-4
Three-phase safety transformers comp. to VDE 0570 part 2-6, EN 61558-2-6

DRUE 50 – 36000 (insulation class E)
DRUF 6000 – 40000 (insulation class F)

All types are also available as three-phase auto transformers (please find calculation method in catalogue section 'In general', paragraph 'Transformers in economy winding').

Design insulation class E

Model	Power	η ≈	Core	Article no.	Copper weight	Total weight	Approx. dimensions in mm					
	VA	%			kg	kg	a	b	c	d	e	Attach.
DRUE 50	50	85,0	3 UI 48/ 26	13–000–01 E	0,22	1,2	96	86	100	71	48	M 4
DRUE 110	110	86,0	3 UI 60/ 21	13-000-02 E	0,7	1,7	120	81	110	90	39	M 4
DRUE 150	150	87,0	3 UI 60/ 31	13-000-03 E	0,8	2,4	120	91	110	90	49	M 4
DRUE 260	260	91,0	3 UI 75/ 26	13-000-04 E	1,1	3,9	150	86	135	113	49	M 5
DRUE 410	410	92,0	3 UI 75/ 41	13-000-05 E	1,5	5,7	150	101	135	113	64	M 5
DRUE 500	500	92,5	3 UI 90/ 31	13-000-06 E	2,2	6,6	180	91	155	136	57	M 6
DRUE 630	630	93,5	3 UI 90/ 41	13-000-07 E	2,5	8,4	180	101	155	136	67	M 6
DRUE 800	800	94,0	3 UI 90/ 51	13-000-08 E	2,8	10,2	180	111	155	136	77	M 6
DRUE 1000	1000	94,0	3 UI 102/ 46	13-000-09 E	3,2	11,3	210	108	175	150	80	M 8
DRUE 1100	1100	94,0	3 UI 114/ 40	13-000-10 E	4,2	13,1	228	110	195	176	71	M 6
DRUE 1200	1200	94,5	3 UI 102/ 57	13-000-11 E	3,6	13,4	210	119	175	150	91	M 8
DRUE 1500	1500	95,0	3UI 120/ 51	13-000-12 E	4,6	17,0	240	121	205	185	81	M 8
DRUE 1750	1750	95,5	3UI 114/ 64	13-000-13 E	5,2	18,9	228	134	195	176	95	M 6
DRUE 2000	2000	95,5	3UI 120/ 61	13-000-14 E	6,3	21,0	240	131	205	185	91	M 8
DRUE 2200	2200	96,0	3UI 120/ 66	13-000-15 E	6,8	22,6	240	136	205	185	96	M 8
DRUE 2400	2400	96,0	3UI 120/ 71	13-000-16 E	8,0	25,0	240	141	205	185	101	M 8
DRUE 2700	2700	96,5	3UI 120/ 75	13-000-17 E	8,9	26,8	240	145	205	185	105	M 8
DRUE 3000	3000	96,5	3UI 132/ 72	13-000-18 E	8,4	29,2	265	152	230	200	102	M 8
DRUE 3400	3400	96,0	3UI 150/ 52	13-000-19 E	11,3	31,2	300	140	260	224	94	M 8
DRUE 4400	4400	96,5	3UI 150/ 65	13-000-20 E	12,2	36,6	300	153	260	224	108	M 8
DRUE 5000	5000	96,6	3UI 150/ 77	13-000-21 E	12,6	41,1	300	165	260	224	120	M 8
DRUE 6000	6000	96,8	3UI 150/ 92	13-000-22 E	15,6	49,6	300	180	260	224	134	M 8
DRUE 6300	6300	96,8	3UI 168/ 75	13-000-23 E	16,4	51,3	336	150	290	248	127	M 8
DRUE 8000	8000	97,1	3UI 168/ 92	13-000-24 E	20,2	62,5	336	170	290	248	144	M 8
DRUE 8200	8200	97,0	3UI 180/ 78	13-000-25 E	20,5	62,0	360	180	310	264	140	M 8
DRUE 10000	10000	97,4	3UI 180/ 93	13-000-26 E	26,6	76,0	360	195	310	264	155	M 8
DRUE 13000	13000	97, 1	3UI 210/ 73	13-000-27 E	37,7	90,0	420	180	360	316	143	M 10
DRUE 16000	16000	97,6	3UI 210/ 88	13-000-28 E	46,8	110,0	420	195	360	316	158	M 10
DRUE 18000	18000	97,8	3UI 210/103	13-000-29 E	48,6	122,0	420	210	360	316	173	M 10
DRUE 20000	20000	97,8	3UI 210/133	13-000-30 E	49,8	144,0	420	240	360	316	203	M 10
DRUE 25000	25000	98,2	3UI 210/133	13-000-31 E	54,8	146,0	420	240	360	316	203	M 10
DRUE 30000	30000	98,0	3UI 240/110	13-000-32 E	79,4	181,0	480	240	415	356	184	M 14
DRUE 36000	36000	98,1	3UI 240/140	13-000-33 E	88,9	218,0	480	270	415	356	214	M 14

Design insulation class F

Model	Power	η ≈	Core	Article no.	Copper weight	Total weight	Approx. dimensions in mm					
	VA	%			kg	kg	a	b	c	d	e	Attach.
DRUF 6000	6000	95,2	3UI 150/ 77	13-000-01 F	12,6	41,1	300	165	260	224	120	M 8
DRUF 7500	7500	95,4	3UI 150/ 92	13-000-02 F	15,6	49,6	300	180	260	224	134	M 8
DRUF 8000	8000	95,6	3UI 168/ 75	13-000-03 F	16,4	51,3	336	150	290	248	127	M 8
DRUF 9600	9600	95,8	3UI 168/ 92	13-000-04 F	20,2	62,5	336	170	290	248	144	M 8
DRUF 10000	10000	95,9	3UI 180/ 78	13-000-05 F	20,5	62,0	360	180	310	264	140	M 8
DRUF 12000	12000	96,3	3UI 180/ 93	13-000-06 F	26,6	76,0	360	195	310	264	155	M 8
DRUF 16000	16000	96,8	3UI 210/ 73	13-000-07 F	33,9	86,0	420	180	360	316	143	M 10
DRUF 19000	19000	96,8	3UI 210/ 88	13-000-08 F	46,8	110,0	420	195	360	316	158	M 10
DRUF 21500	21500	97,0	3UI 210/103	13-000-09 F	48,6	122,0	420	210	360	316	173	M 10
DRUF 25000	25000	97,5	3UI 210/133	13-000-10 F	55,6	150,0	420	240	360	316	203	M 10
DRUF 30000	30000	98,0	3UI 210/133	13-000-11 F	54,8	146,0	420	240	360	316	203	M 10
DRUF 36000	36000	97,8	3UI 240/110	13-000-12 F	79,4	181,0	480	240	415	356	184	M 14
DRUF 40000	40000	97,9	3UI 240/140	13-000-13 F	88,9	218,0	480	270	415	356	214	M 14

Short-term delivery

Subject to technical modifications

RDST 40 – 320

In general:

The rectangular core stacks of our three-phase high power transformers are made of two-layered grain-oriented low-loss strips. The windings consist of high-grade insulated double-lacquered massive copper. Core and windings are vacuum impregnated together and subsequently baked in the drying oven for several hours.

The electrical layout of the transformers is such, that high efficiency is achieved and that transformers remain well below the permissible heating limit specified in VDE regulation. Sound planning guarantees an almost unlimited service life, even when overload of transformers occurs.

RDST-transformers can be applied worldwide, meet national and international regulations and are ready for those upcoming. Following design is available:

Three-phase dry-type transformers comp. to VDE 0532

Design:

Open frame, vertical design, stationary, for installation and set-up in dry rooms, separate windings, sturdy mounting brackets. Connection to sturdy connection terminals (up to 450A) resp. line bars or cable terminals (measurements are not stated below). Maximal voltage (phase-phase) 2000V.

IP 00, suitable for installation up to protection rating IP 23 naturally air self-cooling, ambient temperature 40°C.

Insulation class F (average value temperature 140°C)

Attention: Higher thermal stress at lower efficiency

Because each high power transformer is individually designed, below stated dimensions and weights may show the currently valid state only.

Subject to modifications

We manufacture three-phase dry-type transformers in all requested protection classes up to IP 65.

All types are also available as three-phase auto transformers (please find calculation method in catalogue section 'In general', paragraph 'Transformers in economy winding').

Model with terminal blocks - above 60A

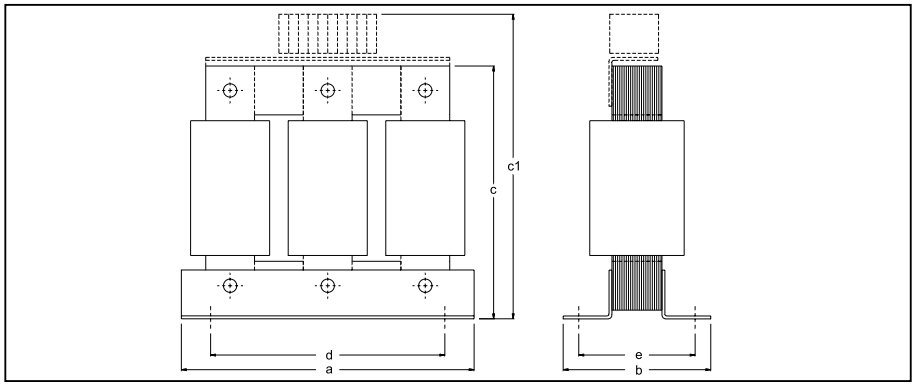

* depending on design and winding type of special currents all measurement may vary, especially measurement b may enlarge up to 10mm!
Measurement d and e on request

Model	Power kVA	Article no	Copper weight app. kg	Total weight app. kg	Approx. dimensions in mm			
					a	b*	c	c1 up to 63A
RDST 40	40,0	0335-00-00040	on request	180	550	220	460	c+100
RDST 50	50,0	0335-00-00050	on request	210	550	270	460	c+100
RDST 63	63,0	0335-00-00063	on request	250	550	300	470	c+100
RDST 80	80,0	0335-00-00080	on request	250	650	300	570	c+100
RDST 100	100,0	0335-00-00100	on request	300	650	320	570	c+100
RDST 125	125,0	0335-00-00125	on request	380	720	320	570	c+150
RDST 160	160,0	0335-00-00160	on request	510	720	380	620	c+150
RDST 170	170,0	0335-00-00170	on request	560	800	360	680	c+150
RDST 200	200,0	0335-00-00200	on request	630	800	400	680	c+150
RDST 250	250,0	0335-00-00250	on request	680	800	450	760	c+150
RDST 320	320,0	0335-00-00320	on request	840	1060	420	900	c+150

Subject to technical modifications **Higher powers on request** **Short-term delivery**

Produktion: www.querformat.info rd/qf/05.03/800

Over 25 years practice in quality products

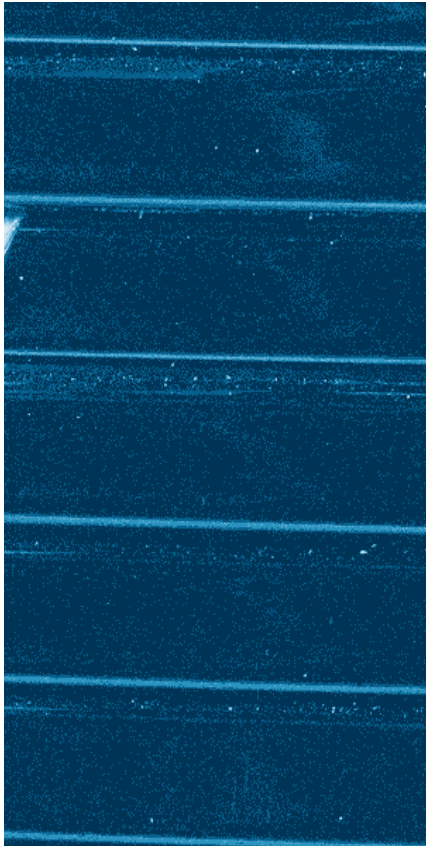

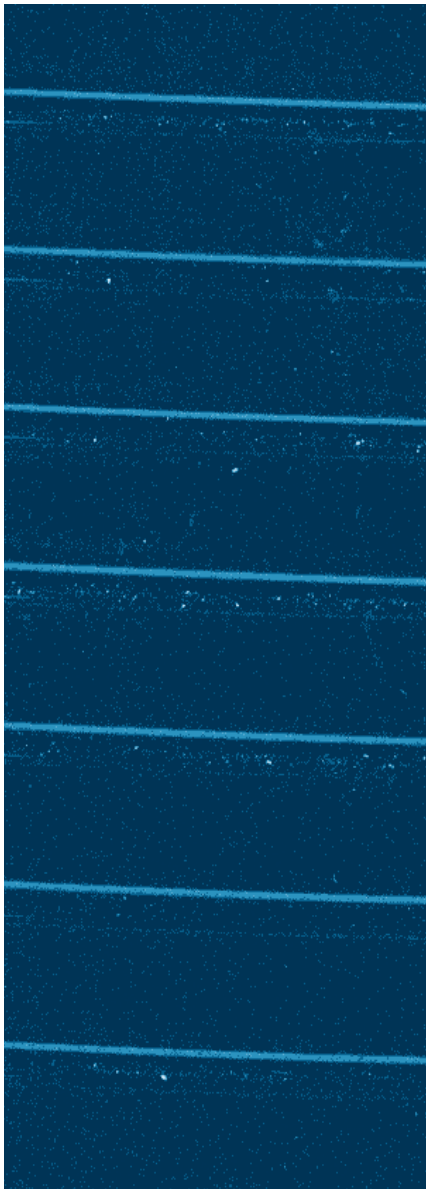

Michael Riedel
Transformatorenbau GmbH
Max-Eyth-Straße 10 · D-74532 Ilshofen-Eckartshausen
Telefon (0 79 04) 7 04-0 · Fax (0 79 04) 7 04 50
www.riedel-trafobau.de · info@riedel-trafobau.de